https://ntrs.nasa.gov/search.jsp?R=19680000880 2018-07-24T01:19:46+00:00Z

N.I.

UNCLASSIFIED

AD 658 529

DESIGN FOR ORIENTATION OF BALLOON-BORNE EQUIPMENT

Gerald A. Anderson

School of Physics and Astronomy
University of Minnesota

June 1967

Processed for . . .

DEFENSE DOCUMENTATION CENTER
DEFENSE SUPPLY AGENCY

N68-10348
(ACCESSION NUMBER)
19 (PAGES)
AD-658529 (NASA CR OR TMX OR AD NUMBER)
(THRU) 3
(CODE) 14
(CATEGORY)
[redacted]ES
CR-90083

FF No. 602(D)

CLEARINGHOUSE
FOR FEDERAL SCIENTIFIC AND TECHNICAL INFORMATION

U. S. DEPARTMENT OF COMMERCE / NATIONAL BUREAU OF STANDARDS / INSTITUTE FOR APPLIED TECHNOLOGY

UNCLASSIFIED

NOTICE TO DEFENSE DOCUMENTATION CENTER USERS

This document is being distributed by the Clearinghouse for Federal Scientific and Technical Information, Department of Commerce, as a result of a recent agreement between the Department of Defense (DOD) and the Department of Commerce (DOC).

The Clearinghouse is distributing unclassified, unlimited documents which are or have been announced in the Technical Abstract Bulletin (TAB) of the Defense Documentation Center.

The price does not apply for registered users of the DDC services.

AD658529

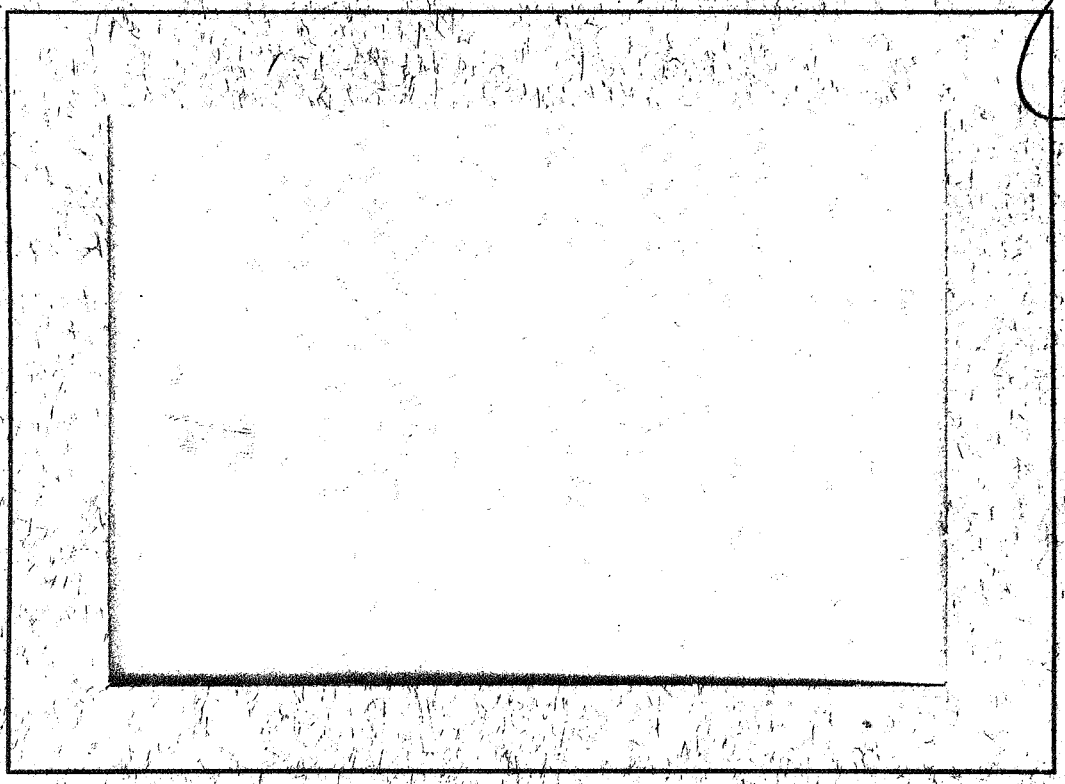

COSMIC RAY GROUP

School of Physics and Astronomy

SEP 26 1967

This document has been approved for public release and sale; its distribution is unlimited.

UNIVERSITY OF MINNESOTA

Reproduced by the
CLEARINGHOUSE
for Federal Scientific & Technical
Information Springfield Va. 22151

19

DESIGN FOR ORIENTATION OF BALLOON-BORNE EQUIPMENT *

by

Gerald A. Anderson

40

CR-96

* Sponsored by NASA contract SD24-005-050(122) and ONR contract Nonr-710(60).

June 1967

ABSTRACT

Presents the design of a system to orientate a balloon-borne instrument package about a vertical axis. Pointing accuracy obtained is $\pm$ 1.5°. An independent photographic recording system measures the azimuth angle with respect to the star Polaris to $\pm$ 0.1°. The instrument package is rotated against a light weight reaction wheel which is designed for maximum moment of inertia. A pulse-width modulation system is used to drive the orientation motor. A fluxgate magnetometer, used for the sensor element, causes the instrument package to be orientated with respect to the horizontal component of the earth's field. The instrument, a gamma-ray telescope, is oriented in the north-south plane and is tilted at an angle with the vertical which will correspond with the elevation of the suspected gamma-ray source when the source crosses the local meridian.

INTRODUCTION

One requirement of many modern balloon-borne experiments is that the orientation of the instrument package about a vertical axis be fixed with respect to a pre-determined set of coordinates. A typical experiment having such a requirement is a search for gamma-ray sources using a telescope developed at the School of Physics and Astronomy, University of Minnesota. This telescope consists of an array of particle detectors including photographic nuclear emulsions, scintillation counters, spark chambers, and a gas Cerenkov counter.

The physical size of this detector array is large compared to the electronics packages, batteries, and auxilliary equipment. For this reason the entire instrument package, contained in a pressurized cylindrical container, approximately .915 m diameter and 2.13 m long, is hung at a fixed declination and oriented about the vertical axis so that suspected sources sweep through the opening angle of the telescope. In our suspension system, the cylinder is supported by a trapeze-type framework, with the capability of tilting the detector package at angles of 10° to 26° from the vertical. The entire package weighs approximately 250 kg. The physical constraints on the orientation system are that no part of the mechanism is to protrude into the field of view of the detector, and that the amount of material above the horizontal plane containing the upper end of the detectors is minimized.

MECHANICAL DESIGN

The objectives of the mechanical design of our system are to couple the instrument package to the balloon in a way that allows the instrument package to rotate about the vertical axis with respect to the balloon, to provide adequate strength to withstand the shocks of launching, parachute opening, and landing, and to provide a reliable method of orienting the instrument

package. We mounted our reaction wheel above the instrument package and incorporated the drive mechanism which rotates the instrument package against the reaction wheel into the suspension system. Figure 1 shows the main elements of the suspension system. The attachment to the balloon is made by standard flexible steel cables and cable fittings. The thrust bearing in the top plate allows the instrument package to rotate with respect to the balloon. The universal joint is used to compensate for the difference in lengths between the cables used to attach the instrument package to the balloon. If the top plate is not perfectly horizontal when the package is suspended from the balloon, the universal joint will prevent the thrust bearing from binding.

The safety cables and safety plate, with its thrust bearing, are a backup system for the universal joint; they will support the instrument package if the shock of parachute opening breaks the universal joint.

The reaction wheel is a lightweight 11.9 kg structure on the general design of a bicycle wheel, 2.75 m diam. The rim is made of 2.54 cm square aluminum tubing. The spokes are made of .16 cm steel aircraft control cable; standard control cable fittings are used to secure the ends of the cables to the rim and hub. The flanges of the hub are made of 1.27 cm aluminum plate, 15.2 cm diameter and separated by 20.3 cm. Following the bicycle wheel design, the twelve spokes are arranged so that they are nearly tangential to the hub at the points of attachment, in order to transmit the maximum torque to the rim for a given tension in the spokes. The reaction wheel is fastened to a stainless steel shaft, 1.59 cm diameter. This shaft is threaded on both ends; the upper end screws into the bottom end of the universal joint; a nut on the bottom end of the shaft bears against a timing belt pulley which, in turn, bears against the thrust bearing

beneath the top beam.

The timing belts and pulleys (T. R. Wood's Sons' Company, Chambersburg, Pa.), constitute a 25:1 speed reduction coupling between the motor and the shaft, and enable the motor to rotate the reaction wheel with respect to the instrument package. Thus, the instrument package from the balloon and as the drive shaft for the orientation system.

Initially, several designs for using the balloon as a reaction wheel were considered. These designs are incompatible with the requirement that the parachute, by which the instrument package is lowered to earth at the termination of the flight, is to be used as the coupling between the balloon and the instrument package. In this arrangement, the shroud lines of the parachute and the instrument package constitute a 'multifilar' pendulum whose free oscillation frequency in the rotational mode is given by

$$\omega = (r/k)\ (g/l)^{1/2}$$

where 'ω' is the natural frequency, 'k' is the radius of gyration of the instrument package, 'r' is the effective circle of separation of the shroud lines, 'l' is the length of the shroud lines, and 'g' is the acceleration of gravity. From the measured values of 'l', 'k', and 'r', the multifilar pendulum frequency for our system was calculated to be .4 radians/second. The natural frequency of our orientation system, for a torque gradient of .25 newton-m/radian and a moment of inertia of 35.4 kg-m^2 is .26 radians/second. These two frequencies are close enough to each other to create a difficult design problem if the balloon is used as the reaction wheel. The design problem is made more difficult by our inability to predict parameters such as air damping and bearing friction at the balloon operating altitude. By rigidly coupling the reaction wheel and the instrument package, most of the

inherent design difficulties can be avoided. In the development of our design we found that it is important that the reaction wheel be coupled to the balloon and that the instrument package be coupled to the reaction wheel. If the reaction wheel is mounted on the bottom of the instrument package, and the orientation system attempts to orient the instrument package, the friction of the thrust bearing between the balloon and the instrument package will cause the parachute shroud lines to twist and store energy. Then, when the instrument package is properly oriented, and the motor stops, the shroud lines will untwist and rotate the instrument package away from the proper orientation. If the thrust bearing was an ideal frictionless bearing, the system of the reaction wheel, instrument package, and motor would be incapable of acquiring any angular momentum with respect to an external reference. However, the nonlinear friction of the bearing will couple the instrument package to the balloon which in turn is coupled to the earth through aerodynamic friction. Under these conditions the system would acquire angular momentum when the motor rotates the reaction wheel, and the system could only dissipate this momentum through the flexible coupling of the parachute shroud lines to the balloon. In our design, on the other hand, motor torque overcomes the friction of the bearing between the instrument package and the reaction wheel through a rigid coupling, and the system does not acquire any angular momentum. In our system, in fact, the friction in the bearing between the reaction wheel and the balloon provides a small amount of coupling to the balloon, and helps to dissipate any angular momentum the system may have acquired.

ELECTRONIC DESIGN

The electronic circuitry used in the orientation servo system is essentially a pulse-width modulation system. (See Figure 2, Drawing 1131-200.)

The power transistors which drive the orientation motor are operated as switches; they are either completely off or completely saturated. Linear control is achieved by controlling the duty cycle, or ratio of conduction time of the power transistors to total cycle time. The pulse repetition frequency is 500 Hz, much faster than the response time of the mechanical system. Consequently, the motor acts as an integrator; its torque is proportional to the average power delivered to it. An advantage of this system is the built-in dither; when the system is near the null position the input to the motor is a series of narrow pulses, which, in turn produce torque impulses from the motor and help to overcome static friction. The motor driver transistors dissipate a minimum of power in this system; consequently, elaborate heat-sinks are unnecessary. Another advantage is the ease of incorporating additive terms to the system response function. This ability makes it possible to counteract the non-linear friction of the motor and bearings.

The basic circuit in our system is a modified height-time converter, which produces a pulse proportional in duration to the amplitude of the error signal. The trailing edge of the error-proportional pulse triggers a monostable multi-vibrator, which, in turn, produces a fixed-width pulse. The width of the second pulse has been adjusted to compensate for the static friction of the motor brushes and gondola suspension bearings and also to compensate for the L/R time-constant of the motor windings. The two sequential pulses are added in time to produce a drive pulse to the motor of the function:

$$t = k\,\theta + T$$

where 't' is the total duration of the drive pulse, 'k' is the gain of the

servo system, 'θ' is the error angle, and 'T' is the duration of the fixed width pulse.

The sensing element used to orient the instrument package is a flux-gate magnetometer, (Type MID-5C-100NB, Schonstedt Instrument Company, Silver Springs, Maryland.) The output function of this magnetometer is:

$$E_{out} = k (\cos \theta) \phi$$

where 'k' is a constant dependent on the model of the magnetometer, 'θ' is the angle between the axis of the sensor and the magnetic field vector, and 'ϕ' is the scalar intensity of the magnetic field. No particular difficulties were encountered in using the single axis magnetometer, although the axis of the sensor was horizontal, and therefore the error signal was proportional to the angle between the axis and the horizontal component of the earth's magnetic field. The error signal from the magnetometer is fed into a mixer amplifier. Because the error signal is a low amplitude dc signal, a differential transistor pair is used for good temperature stability. In principle, several other inputs could be fed to the mixer-amplifier, such as the outputs of rate gyros, techometers, and other velocity-dependent signals, to provide damping, or programming signals to compensate for the change in magnetic variation. The basic timing circuit for the system is a simple unijunction relaxation oscillator, followed by pulse-shaping circuits which provide both positive and negative pulses at 500 Hz. The timer pulses charge the integrating capacitor in the Miller integrator ramp generator. The output of the Miller integrator is fed to a phase-splitter, which provides two ramps of nearly equal amplitude and opposite polarity. An adjustable section of the emitter resistor in the phase splitter controls the saturation voltage of the phase splitter, and also the effective deadband of the system.

The ramp voltages are compared to the error signal in two parallel discriminators. The CW discriminator will provide an output pulse if the error signal is positive, and the CCW discriminator will provide an output pulse if the error signal is negative. Although one discriminator could have been used with a triangular wave reference, the maximum duty cycle possible would have been 50 percent; our system can attain a maximum duty cycle of nearly 100 percent. The output of the differential amplifier in the discriminator is fed into a Schmitt trigger circuit; the regenerative feedback and hysteresis of this circuit ensures that the output signal will definitely be in either the '1' (positive) state, when the ramp voltage is less than the error signal; or the '0' (negative) state, when the ramp voltage is greater than the error voltage; with a minimum of switching time. The output of this circuit is fed to a phase splitter, which provides both the signal and its complement to the various logic circuits. The trailing edge of the discriminator pulse triggers the fixed pulse generator. The outputs of the discriminator, the fixed pulse generator, and a protection or enable flip-flop circuit are combined in a logic circuit to produce the input pulse to the motor driver circuit.

The Boolean function of the logic circuit is, (for a positive error signal):

$$\overline{(\overline{CW\ FIXED} \cdot \overline{CW\ DISCRIMINATOR})} \cdot \overline{CW\ ENABLE}$$

By DeMorgan's theorem, this expression can be simplified to:

$$(CW\ FIXED + CW\ DISCRIMINATOR) \cdot CW\ ENABLE$$

Thus, for a pulse to the motor driver to be generated, the enable flip-flop must be in the proper state and either the discriminator or the fixed pulse generator must be in the '1' stage.

The enable flip-flop has the important function of ensuring that only one 'polarity' of drive pulse to the motor drive circuit is produced in any one cycle. That is, if noise causes the discriminators and the fixed pulse generators to produce simultaneous pulses which would drive the motor in both directions at the same time, the enable flip-flop allows only one direction of motor drive at any one time. The state of the enable flip-flop is changed by the negative-going trailing edge of the discriminator pulse which has the greater length and, therefore, more error signal component.

The motor driver circuit consists of a simple bridge circuit using PNP and NPN transistors in complementary symmetry. Reversed-bias diodes are connected across each transistor, collector to emitter, to clamp any voltage transient generated by switching off the current through the motor windings. In such a bridge, great care must be taken that only those two transistors on opposite sides of the motor conduct at any one time. This precaution is satisfied by the enable flip-flop, and by the design that requires positive base drive from an external source. This design also ensures that the bridge will not destroy itself if the regulated supply voltages to the logic are not present.

The operation of the pulse-width modulcation can best be understood by tracing the signals through a cycle with the aid of the timing diagram (Figure 3).

Initially, assume a negative error signal which is inverted by the mixer-amplifier. The timing oscillator pulses and resets the ramps to zero. Because the ramp voltage is lower in amplitude than the error voltage, the CW discriminator is in the '1' state. When the amplitude of the ramp voltage equals the amplitude of the error signal the discriminator switches to the '0' state and, in switching, triggers the fixed pulse generator. Assuming the enable flip-flop is in the proper state, voltage will be applied across the motor windings as long as either the discriminator or the fixed pulse

generator is in the '1' state. As the axis of the instrument package approaches the proper orientation the amplitude of the error signal and the duration of the discriminator pulse decreases until when the orientation is within the dead band, no drive pulse is applied to the motor at all. If the axis of the instrument crosses the deadband the error voltage will reverse in polarity, the CCW discriminator will produce pulses, and after the first pulse has changed the state of the enable flip-flop, the motor will turn in the opposite direction.

The motor used in our system is an Inland Type T 5721 (Inland Motor Corporation of Virginia, Radford, Virginia). This motor is a permanent-magnet torque motor; that is, the output torque is nearly proportional to the applied voltage, over a wide range of angular velocities. The speed voltage, or back emf, coefficient is very low. This type motor was chosen for its fast response and its high stall torque.

Because the output of the magnetometer is a dc signal, the instability of the positive and negative 6 volt power supplies is directly related to the error in orientation. In our design, the positive and negative 6 volt supplies are series regulators, drawing their power from the silver-zinc cells used to power the rest of the instrument package. A temperature-compensated silicon breakdown diode (Motorola MCR 2225) is used as the single voltage reference in the positive supply. The negative supply obtains its reference from the positive regulated output voltage, so that, if the reference changes with temperature, the positive and negative voltages will change equally in magnitude. In temperature tests the voltages changed approximately 6 millivolts over the temperature range from +25°C to -30°C. The only effect of changes in the motor supply voltages is a slight change in system gain; consequently, the motor is supplied directly from the batteries.

FLIGHT RESULTS

The University of Minnesota gamma-ray telescope was flown from the NCAR facility at Palestine, Texas, on 16 October, 1966 and again on 12 December, 1966. The orientation system was turned on by ground command when the balloon reached its ceiling of 140,000 ft. Orientation was achieved within 30 seconds and held to within $\pm$ 1.5° for 4 hours, the duration of the flight. The orientation direction was monitored by two 35 mm cameras which were mounted on the instrument package so that when orientation was achieved the star Polaris was in the field of view of the cameras. In one of these shutterless cameras the film traveled continuously, in a horizontal direction, to record the pitch about the east-west axis. In the other camera the film traveled in a vertical direction to record the azimuth angle. Figure 4, which shows a sample of the vertically moving film, illustrates the pointing accuracy of the orientation system. The track of Polaris is deliberately off-center in this part of the film to compensate for the change in variation in the earth's field as the balloon traveled from west to east.

The horizontal scale in Figure 4 is the actual field of view of the camera. The actual azimuth error from the center of the film is, for small error angles and low geographical latitudes, approximately

$$\Delta \text{ azimuth} = \frac{\Delta \text{ field of view}}{\cos(\text{latitude})} \quad .$$

The lenses in these cameras are 35 mm. diameter x 118 mm. focal length. The film, which travels at a linear velocity of 4.7 cm/min., is Kodak Linagraph Shellburst, Estar Base.

ACKNOWLEDGEMENTS

The University of Minnesota gamma-ray telescope was constructed under NASA Contract SC24-005-050(122). Balloon flight services were funded by ONR contract Nonr-710(60). The author wishes to express his appreciation to Captain T. C. May, USAF, for his assistance in the design of the orientation system; to Professor C. J. Waddington, for his criticism of this manuscript; and to the shop personnel of the School of Physics and Astronomy who constructed the electronic and mechanical components of the orientation system.

FIGURE CAPTIONS

Figure 1: Mechanical design of suspension system.

Figure 2: Orientation circuit.

Figure 3: Timing diagram for the orientation circuit.

Figure 4. Sample of film from azimuth monitoring camera.

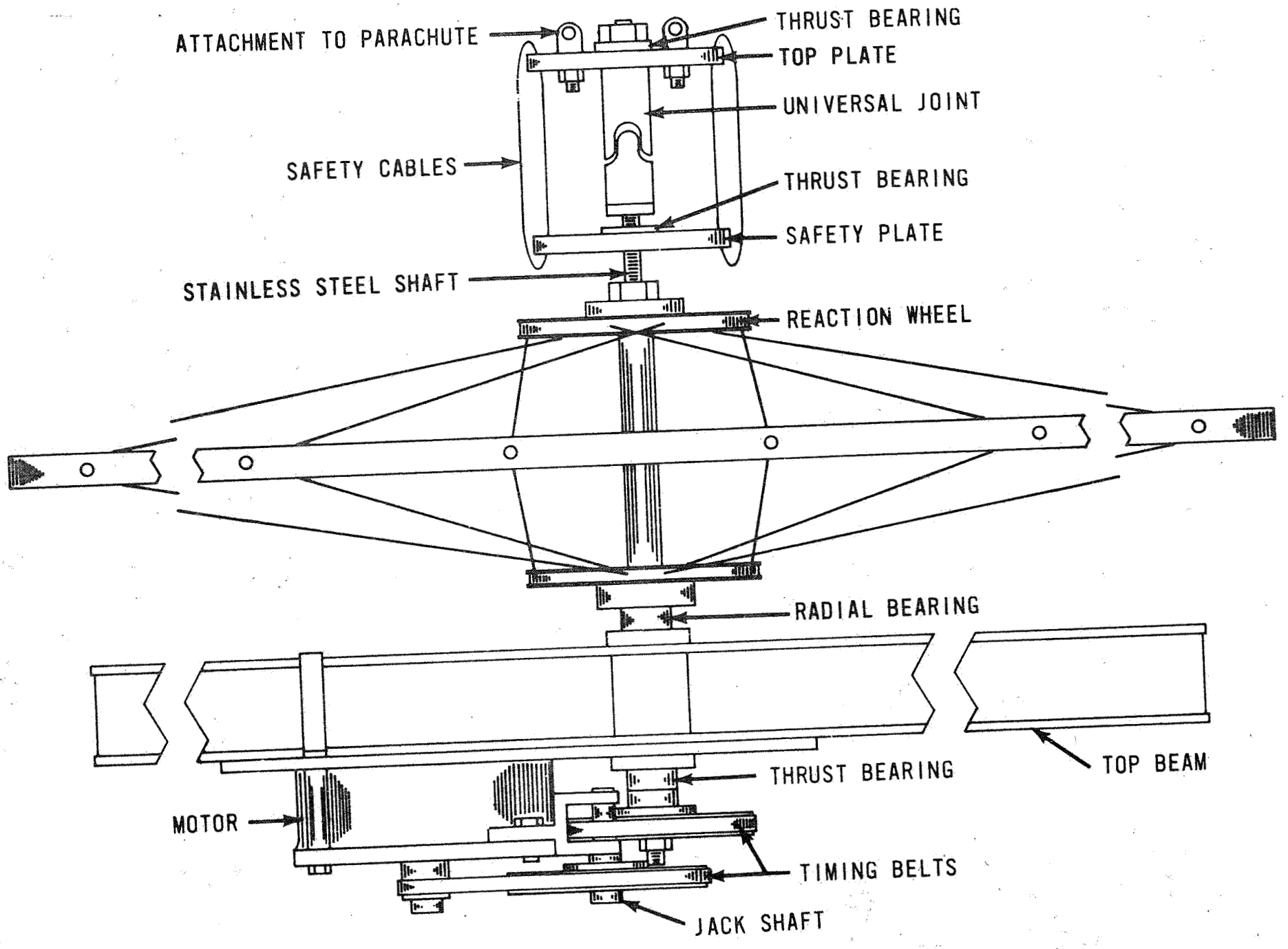
ATTACHMENT TO PARACHUTE
THRUST BEARING
TOP PLATE
UNIVERSAL JOINT
SAFETY CABLES
THRUST BEARING
SAFETY PLATE
STAINLESS STEEL SHAFT
REACTION WHEEL
RADIAL BEARING
THRUST BEARING
TOP BEAM
MOTOR
TIMING BELTS
JACK SHAFT

FIGURE 1

FIGURE 2

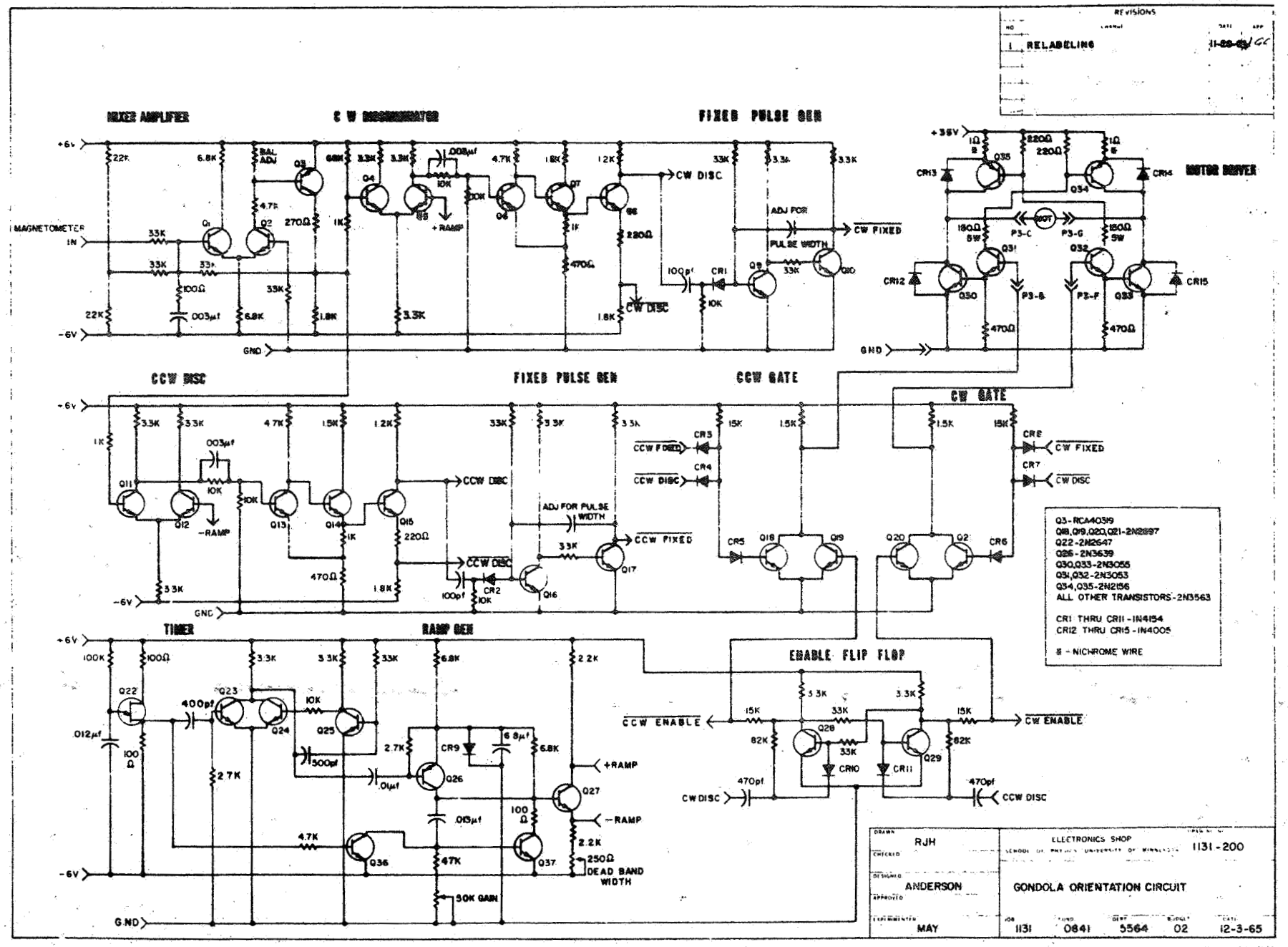
REVISIONS
1 RELABELING
MIXER AMPLIFIER
C W DISCRIMINATOR
FIXED PULSE GEN
MOTOR DRIVER
MAGNETOMETER IN
CW DISC
CW FIXED
ADJ FOR PULSE WIDTH
+RAMP
CCW DISC
FIXED PULSE GEN
CCW GATE
CW GATE
CCW FIXED
-RAMP
TIMER
RAMP GEN
ENABLE FLIP FLOP
CCW ENABLE
CW ENABLE
+35V
GND
Q3-RCA40319
Q18,Q19,Q20,Q21-2N2697
Q22-2N2647
Q26-2N3639
Q30,Q33-2N3055
Q31,Q32-2N3053
Q34,Q35-2N2156
ALL OTHER TRANSISTORS-2N3563
CR1 THRU CR11-IN4154
CR12 THRU CR15-IN4005
* - NICHROME WIRE
RJH
ANDERSON
MAY
ELECTRONICS SHOP
1131-200
GONDOLA ORIENTATION CIRCUIT
1131
0841
5564
02
12-3-65

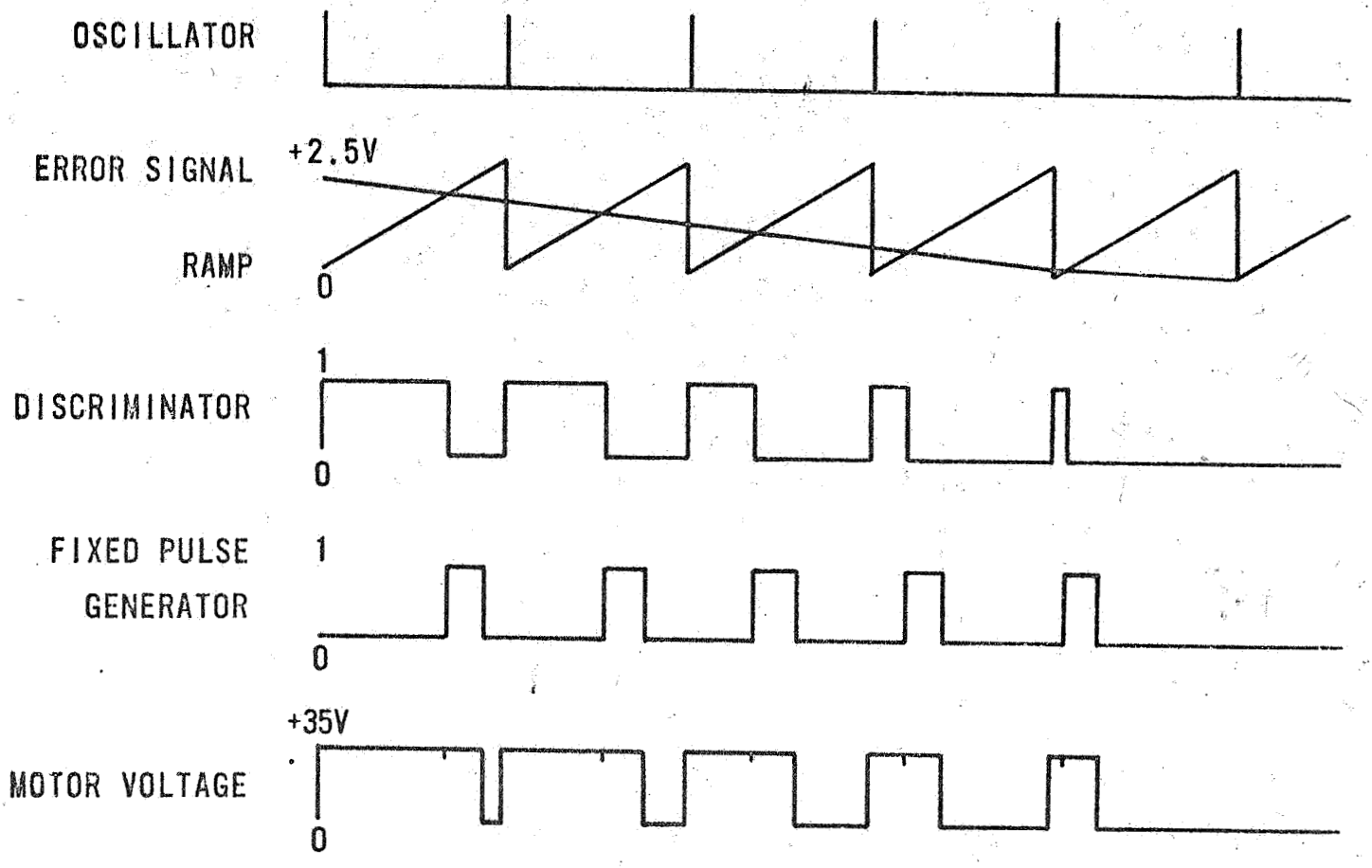

FIGURE 3 TIMING DIAGRAM

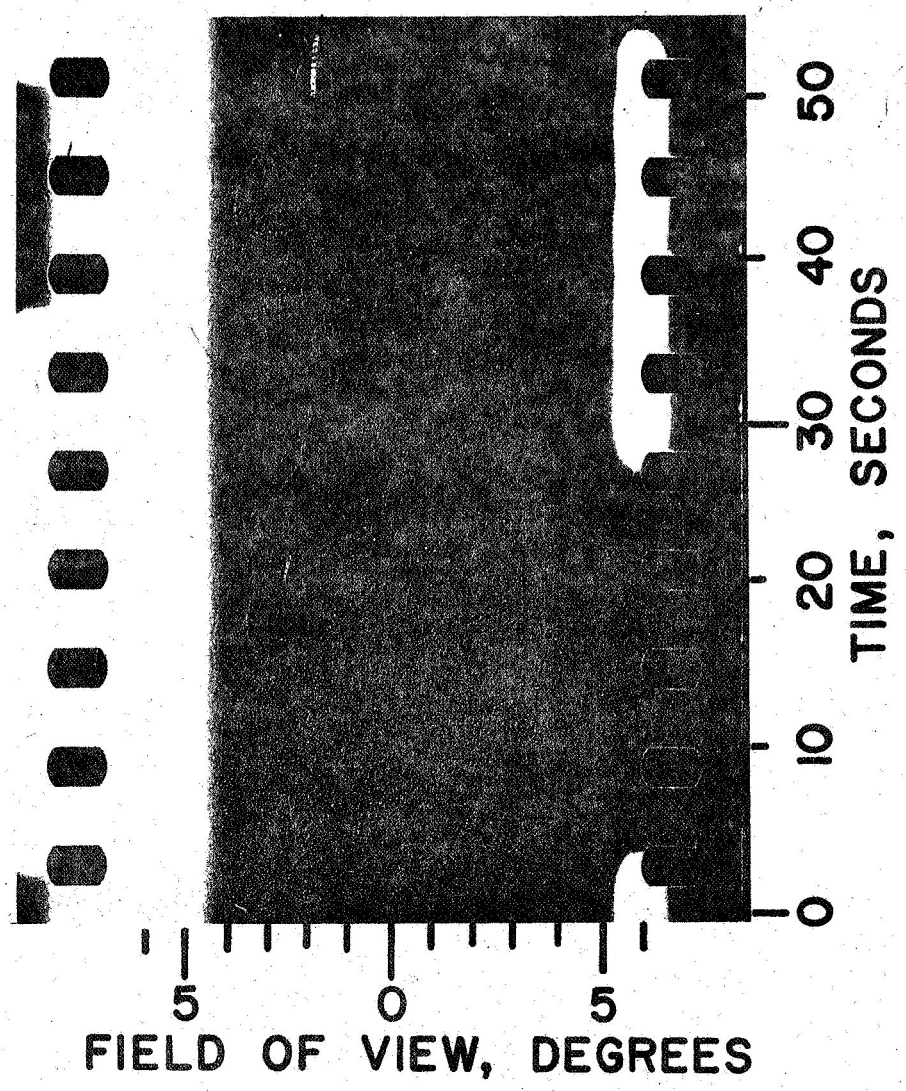

FIGURE 4